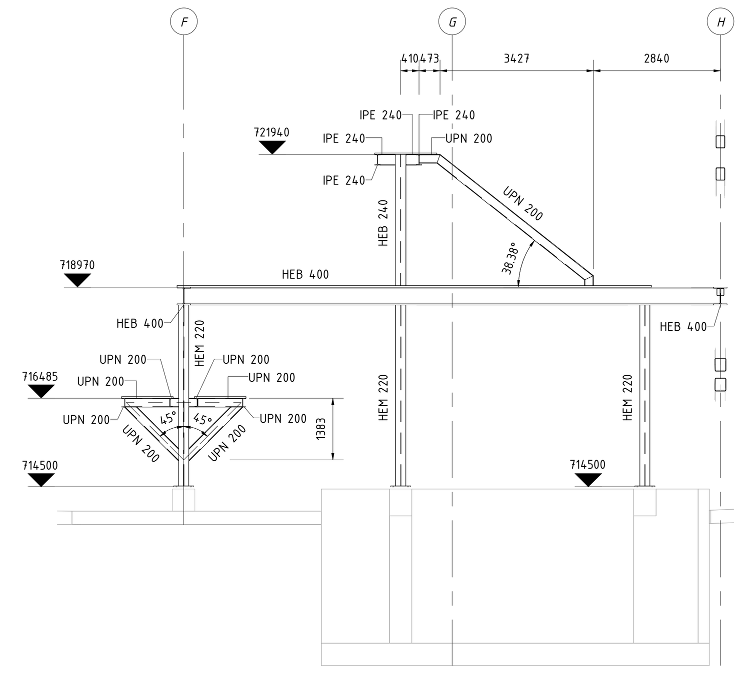

ALIGNMENT 7-8
1 : 100

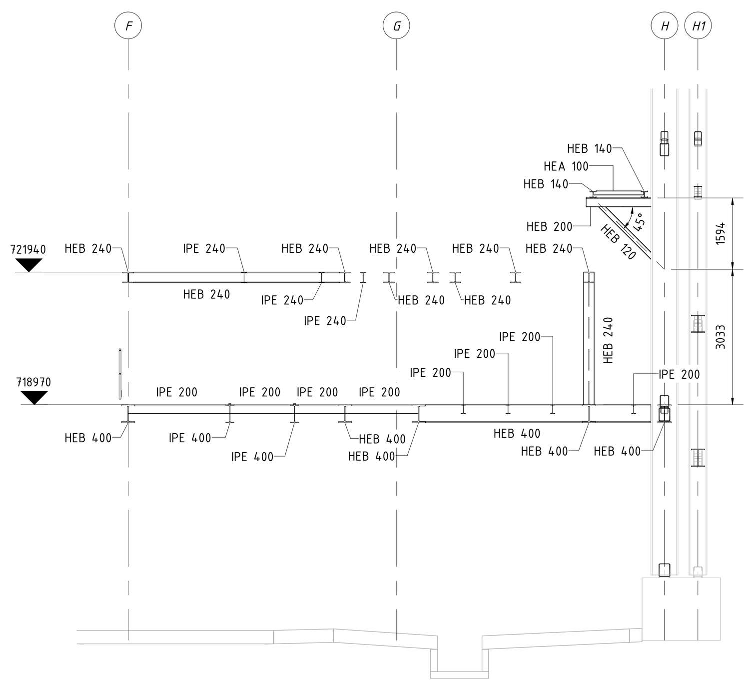

ALIGNMENT 7
1 : 100

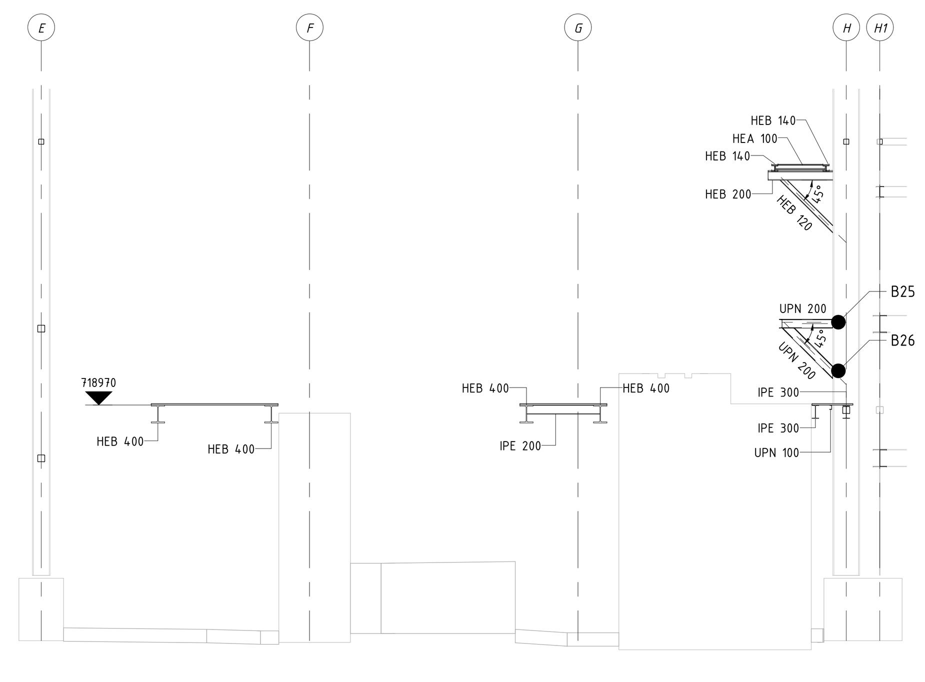

ALIGNMENT 6
1 : 100

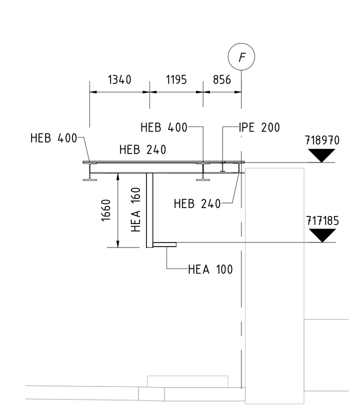

ALIGNMENT 5-6
1 : 100

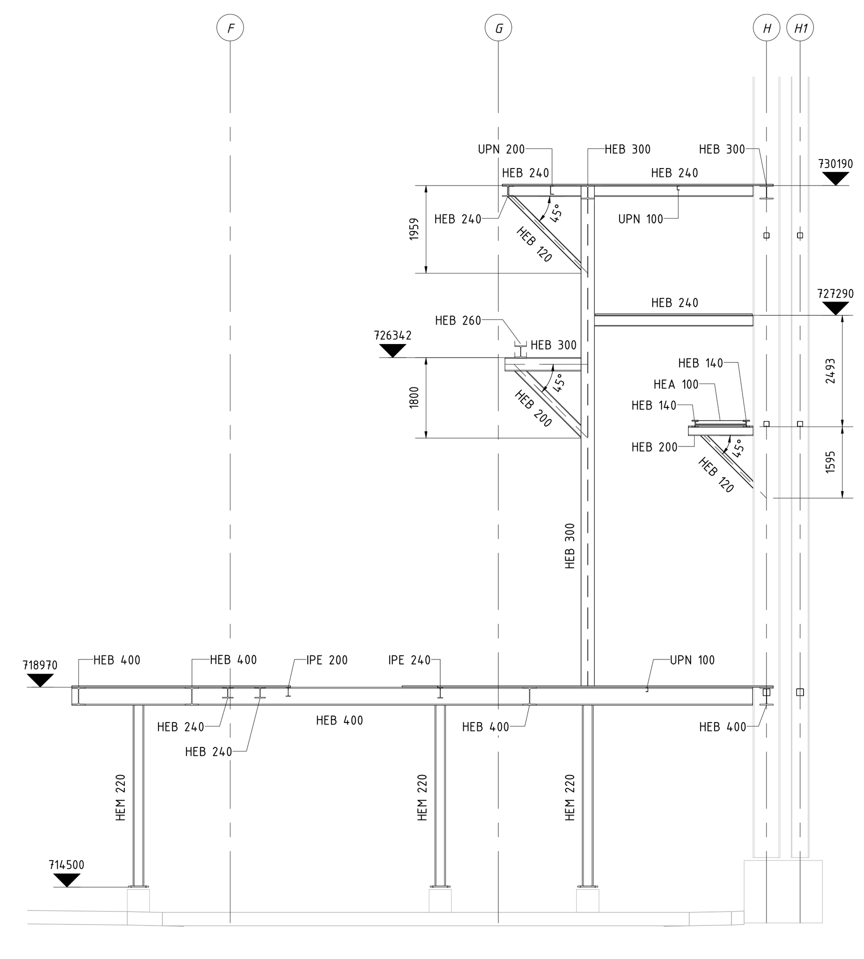

ALIGNMENT 5
1 : 100

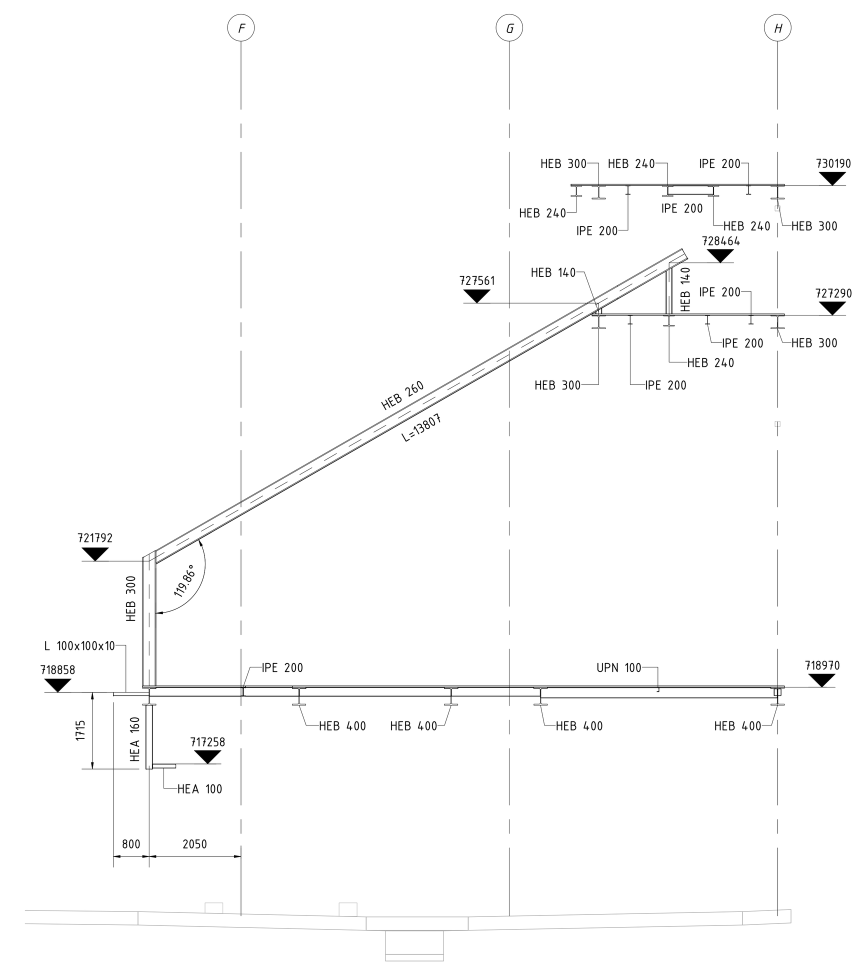

ALIGNMENT 4-5
1 : 100

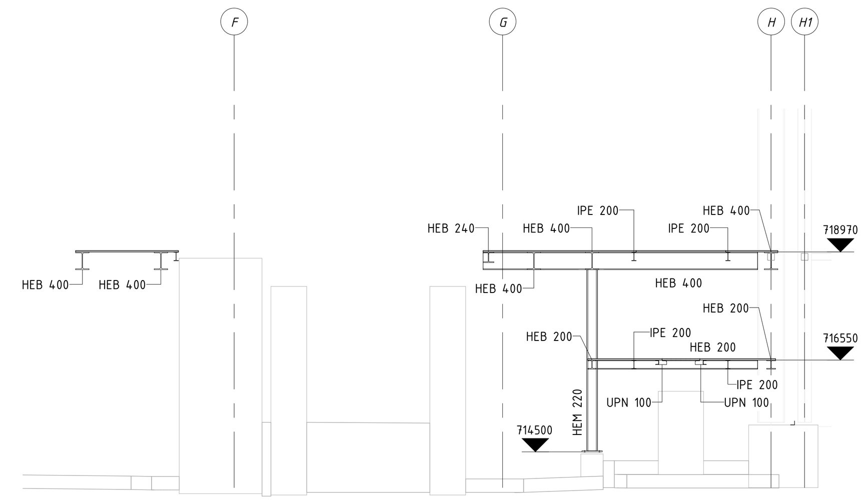

ALIGNMENT 3
1 : 100

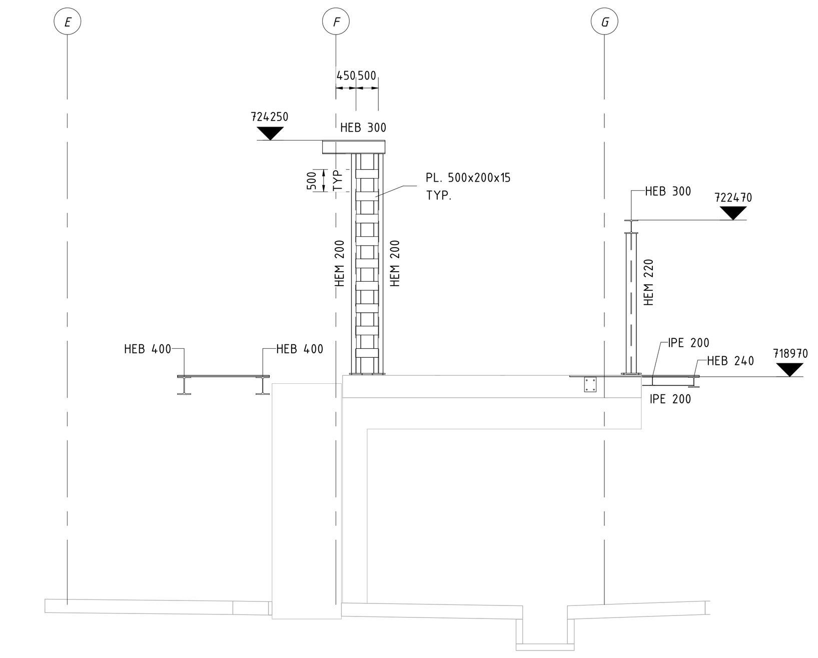

ALIGNMENT 2-3 .1
1 : 100

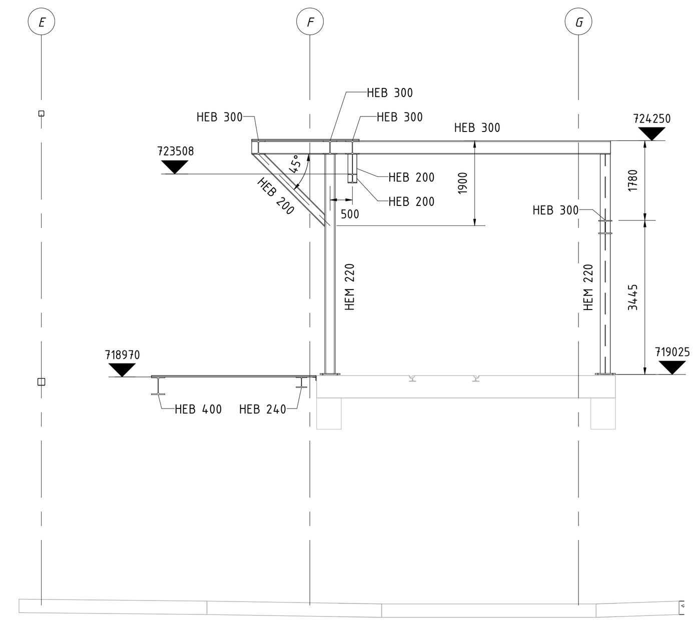

ALIGNMENT 2-3 .2
1 : 100

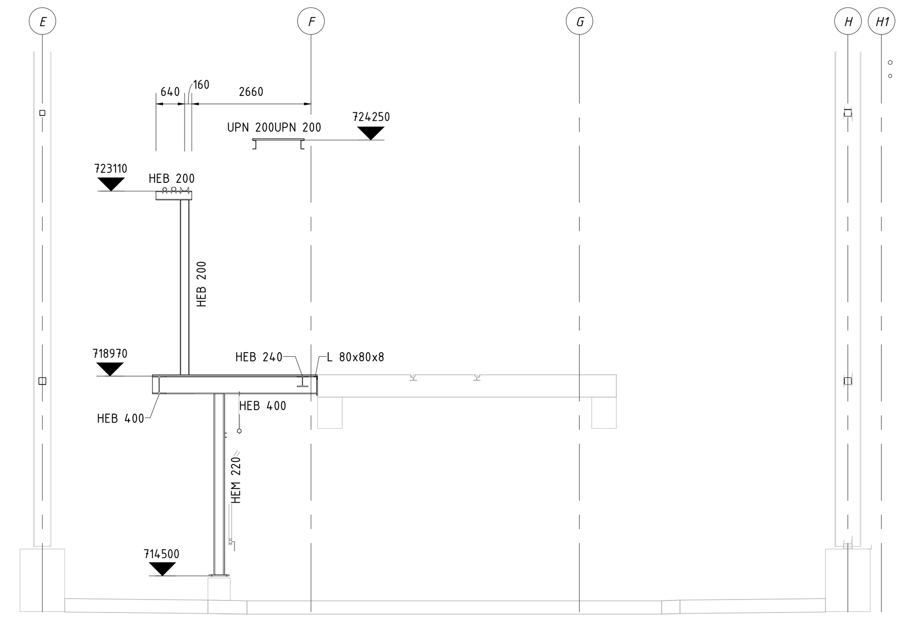

ALIGNMENT 2
1 : 100

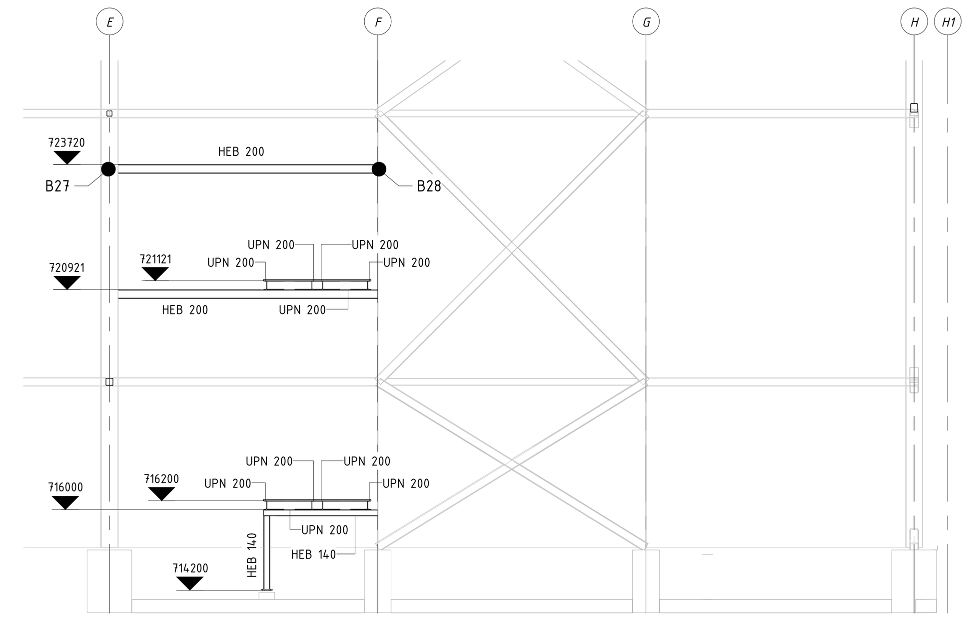

ALIGNMENT 1
1 : 100

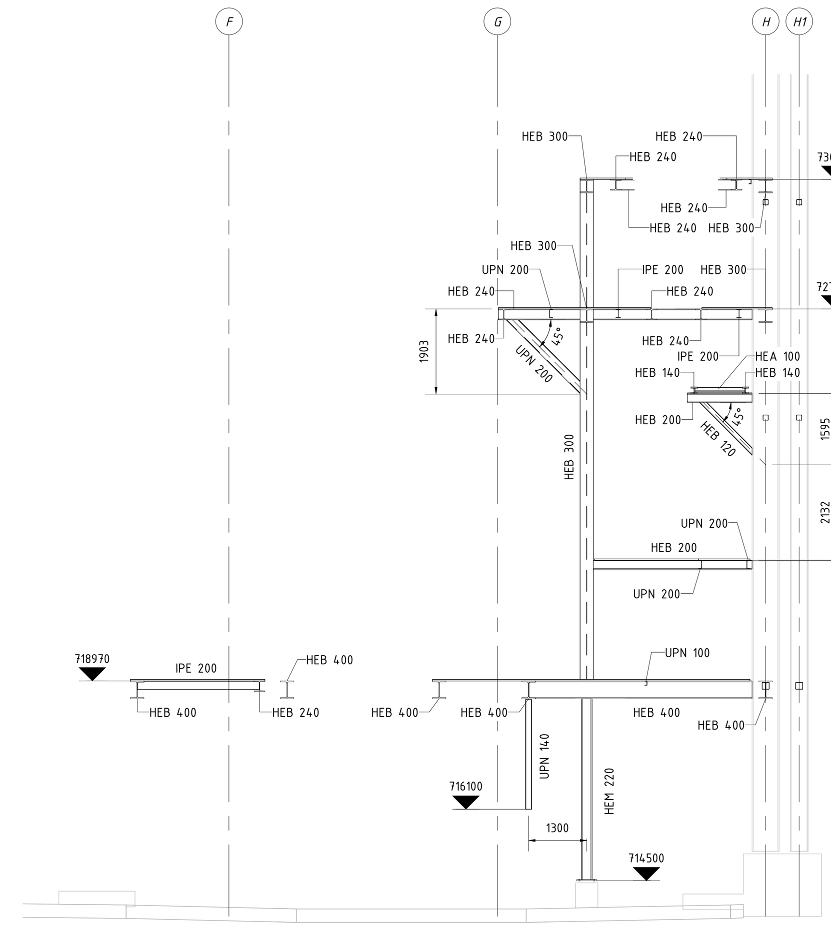

ALIGNMENT 4
1 : 100

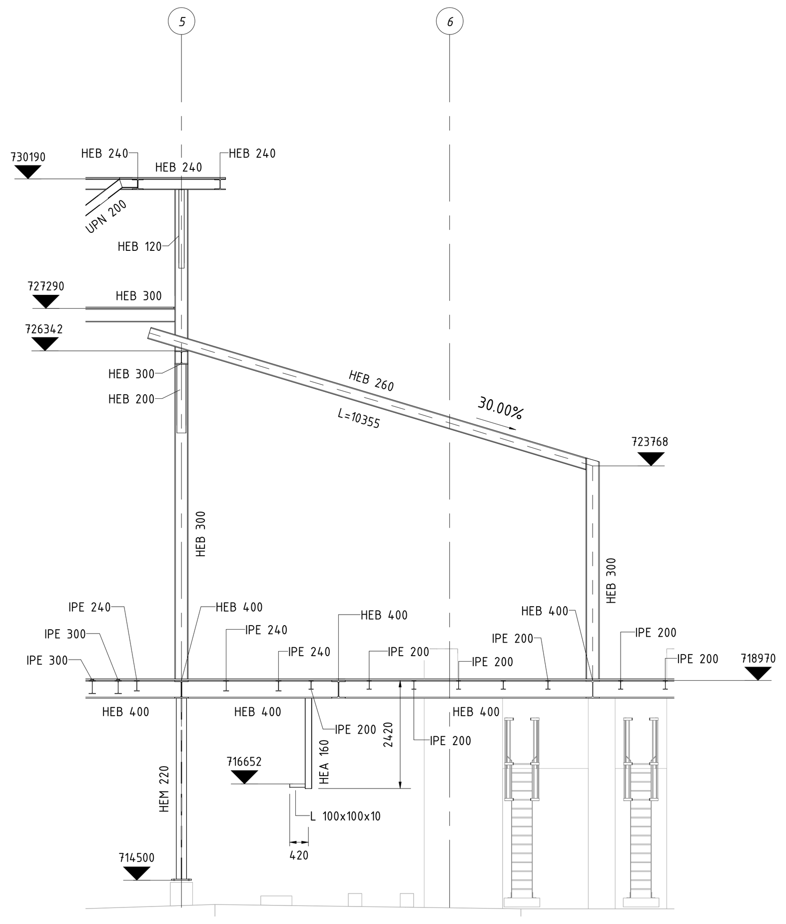

SECTION 01
1 : 100

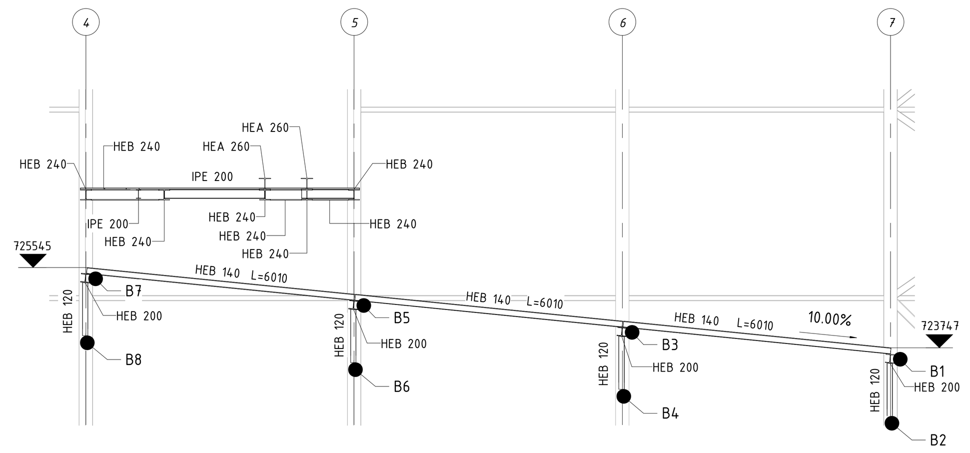

SECTION 02
1 : 100

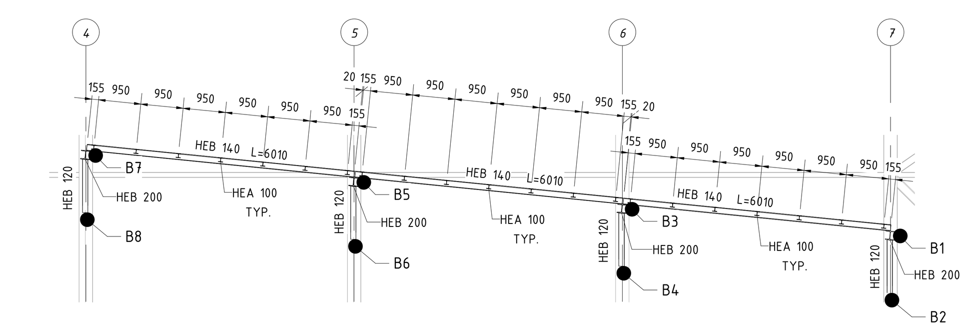

SECTION 05
1 : 100

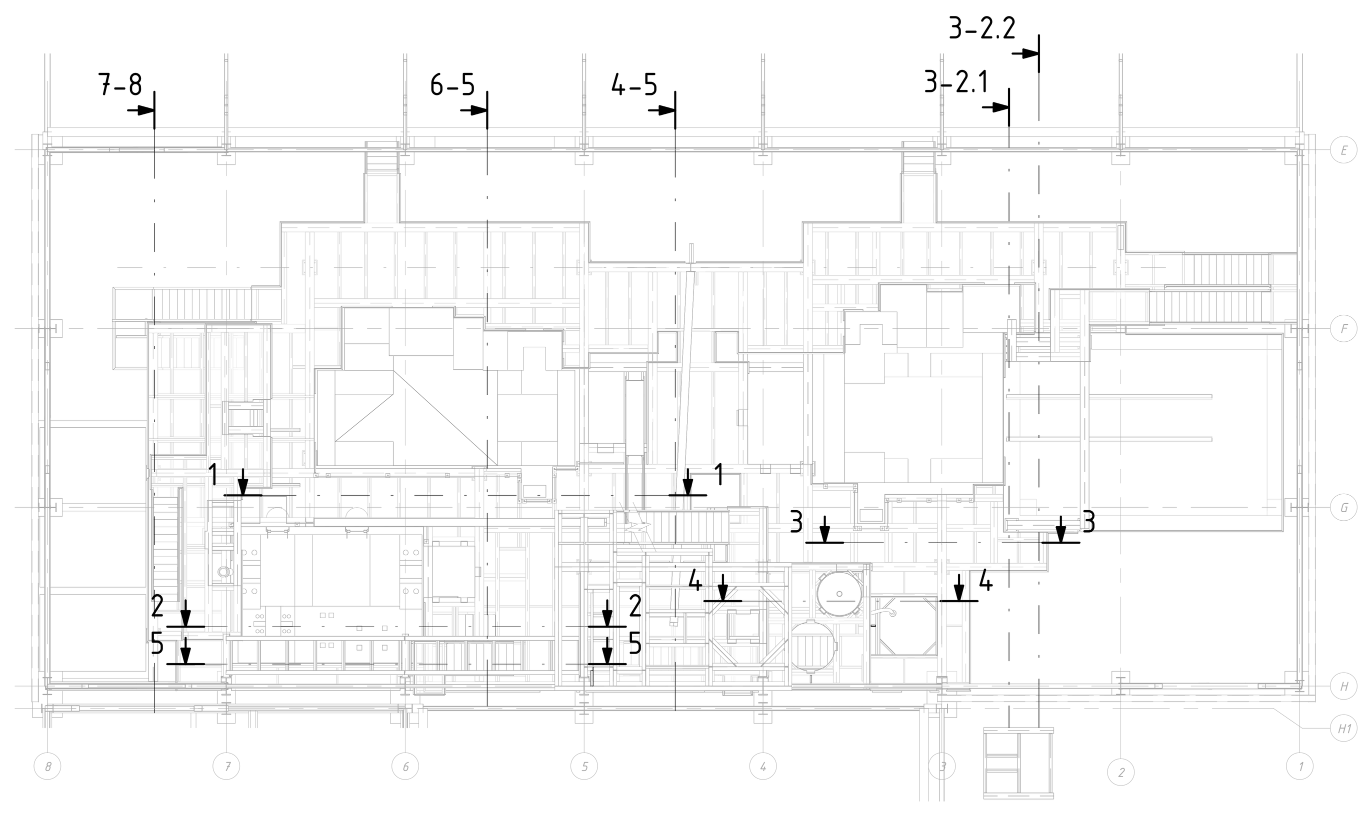

GUIDE PLAN
1 : 150

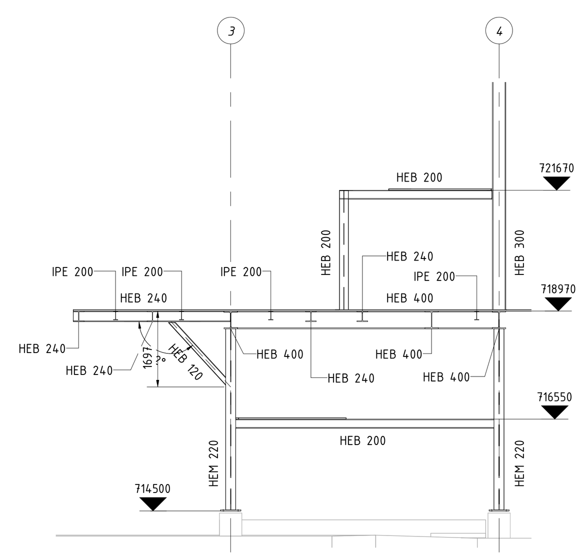

SECTION 03
1 : 100

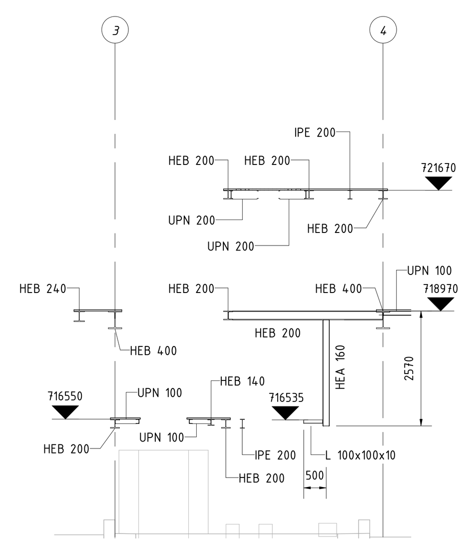

SECTION 4
1 : 100

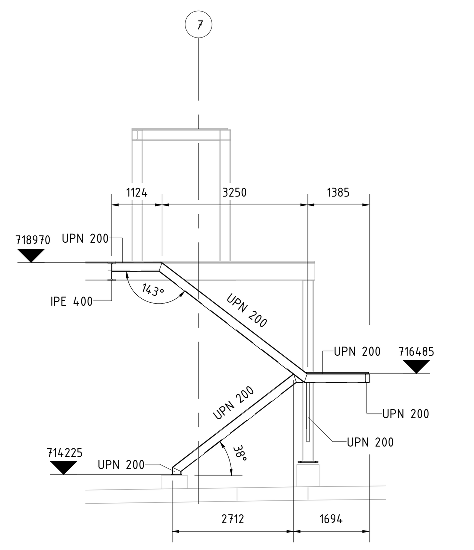

STAIRS 01
1 : 100

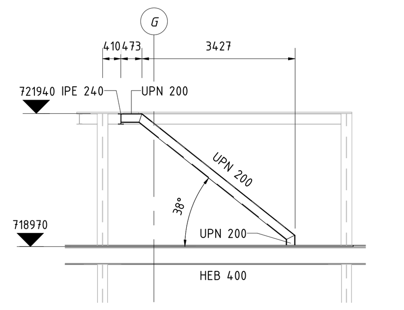

STAIRS 02
1 : 100

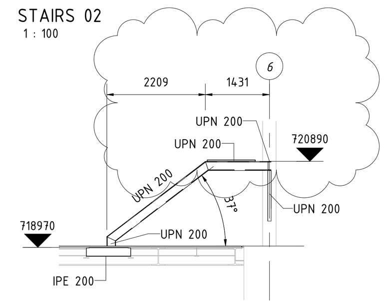

STAIRS 03
1 : 100

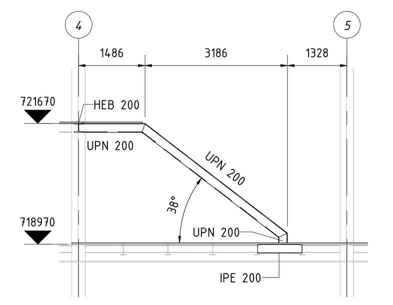

STAIRS 04
1 : 100

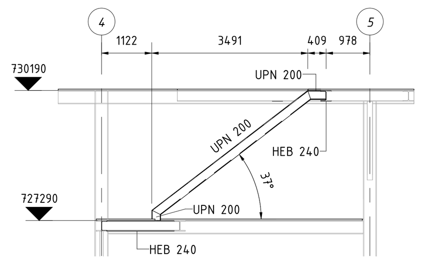

STAIRS 05
1 : 100

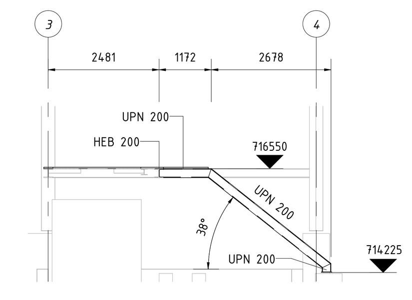

STAIRS 06
1 : 100

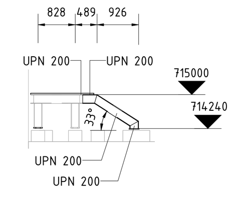

STAIRS 07
1 : 100

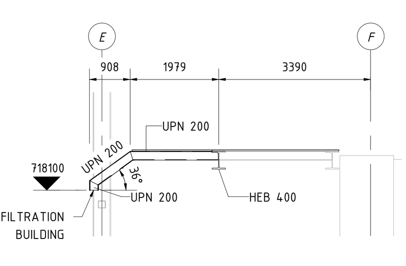

STAIRS 08
1 : 100

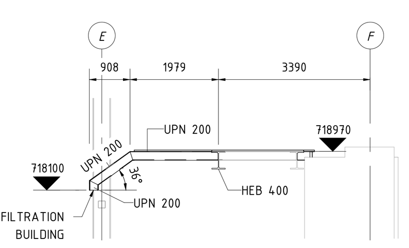

STAIRS 09
1 : 100

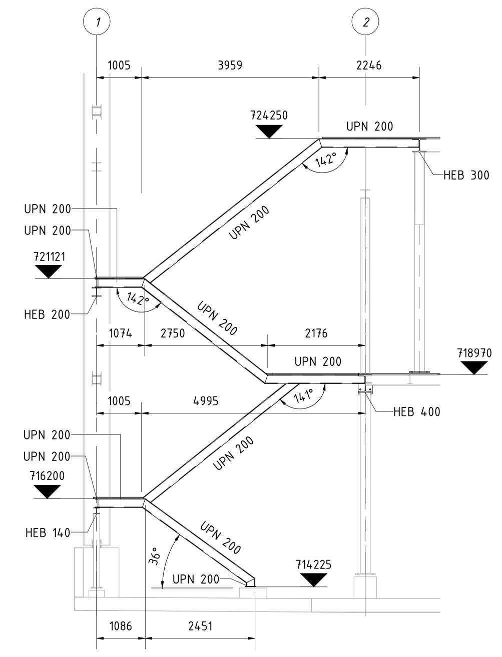

STAIRS 10
1 : 100

1. ALL DIMENSIONS ARE IN mm. COORDINATES AND ELEVATIONS ARE IN m. UNLESS OTHERWISE INDICATED.
2. ALL PROFILES WILL BE OF STEEL S275JR.
3. CONSTRUCTOR SHOULD CHECK ALL DIMENSIONS BEFORE FABRICATION AND CONSTRUCTION.

Rev.	Author/Date		Checked/Date		Approved/Date		Description
1	PCR	10/03/2023	ATB	10/03/2023	ATB	10/03/2023	FOR CONSTRUCTION
1	PCR	25/11/2022	ATB	25/11/2022	ATB	25/11/2022	AS INDICATED
0	MRF	25/10/2022	ATB	25/10/2022	ATB	25/10/2022	FOR CONSTRUCTION

Customer: JSC RMG Auramine LLC

RMG AURAMINE

Chemitec consulting oy

PROTON

Project: BEQTAQARI DETAIL ENGINEERING

Title: GRINDING PLANT STEEL STRUCTURES SECTIONS

3d model: P1384-200-RV-200-5c-grinding

Customer doc. code:

Area:	Scale:	Format:	Doc. code:	Rev:
200	1:100	A0	P1384-200-ST-006	2