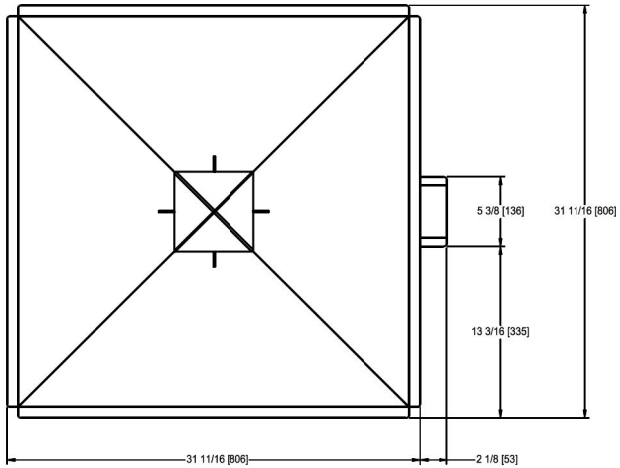

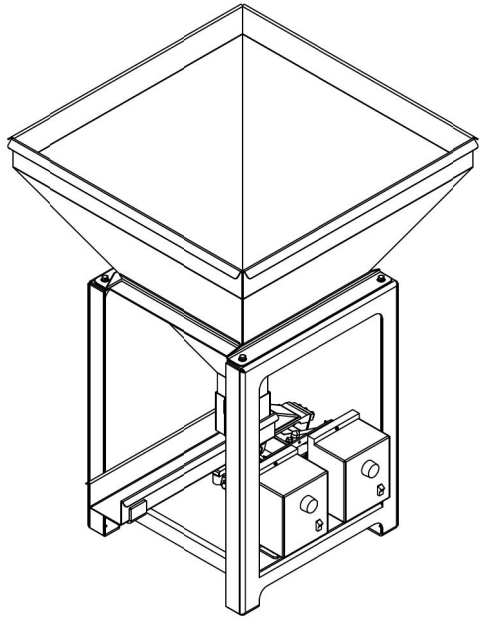

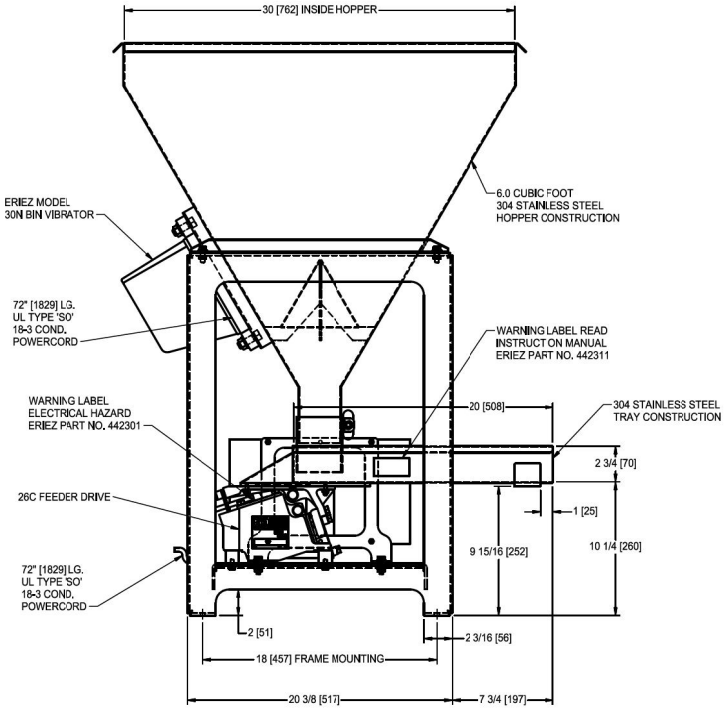

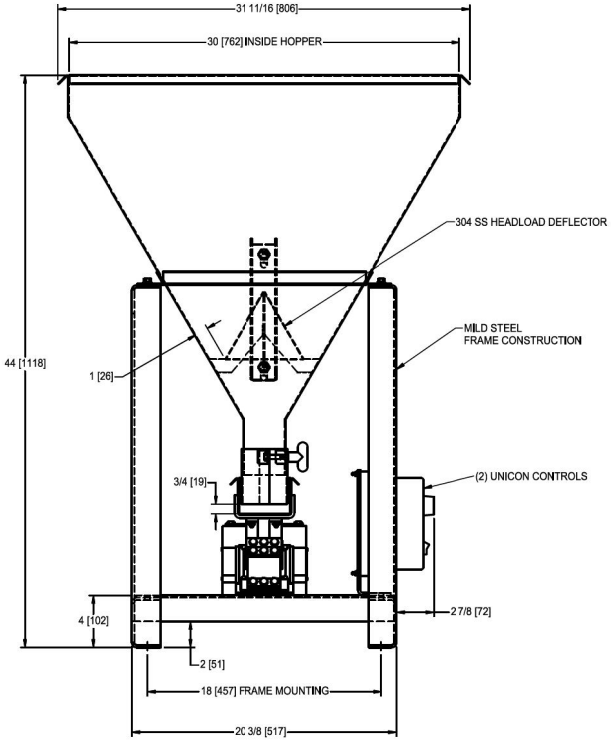

RATINGS & CHARACTERISTICS

POWER SUPPLY..... 230VAC 50Hz SINGLE PHASE
FULL LOAD POWER INPUT TRAY..... 0.66 AMPS
FULL LOAD POWER INPUT BIN VIB.... 0.72 AMPS
APPROXIMATE WEIGHT..... 205 LBS [93 Kg]
FINISH..... TRAY & HOPPER SATIN GLASS BEAD
DRIVE PAINTED STEEL-IT
FRAME PAINTED STEEL-IT

ERIEZ
WORLD AUTHORITY IN ADVANCED TECHNOLOGY FOR MAGNETIC, VIBRATORY AND METAL DETECTION APPLICATIONS
WORLD HEADQUARTERS, ERIE, PA, USA

TITLE	OUTLINE	
FOR	VFM-26-6.0-30 4 X 20 X 2 3/4 OPEN 304SS TRAY, 26C DRIVE, 6.0 CU.FT. 304SS SQ. HOPPER W/ ADJUSTABLE SPOUT, 30N BIN VIBRATOR, (2) UNICON CONTROLS, MOUNTED ON MS FRAME	
DR. BY JLW	DATE 03/12/2013	SCALE 1 = 5
ORDER # 262259	E.R. # NA	PRIOR REF NA
NEXT ASSY 4N-201302398	NOTICE—THIS DRAWING AND THE PRINCIPLE OF DESIGN ARE THE PROPERTY OF AND PROPRIETARY TO ERIEZ	
INCHES [MILLIMETERS]	DRAWING NUMBER 4R-201302441	REVISION 0

PROPER SCALE

REV	CHANGE MADE	BY	DATE	ORDER #