HABERMANN AURUM PUMPEN	**Type of installation** APWEX-SR 100-200	**Receiver**	**From**	Page: 3
Revision no				

Pump dimensions

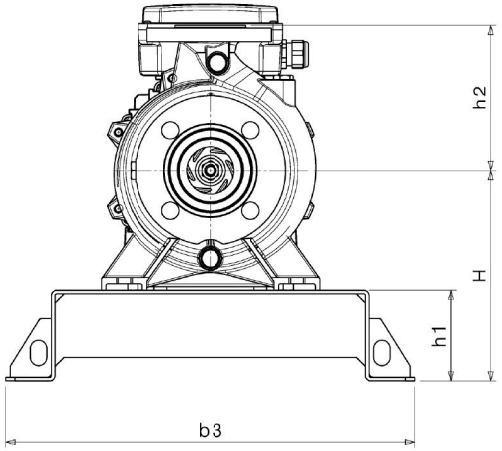

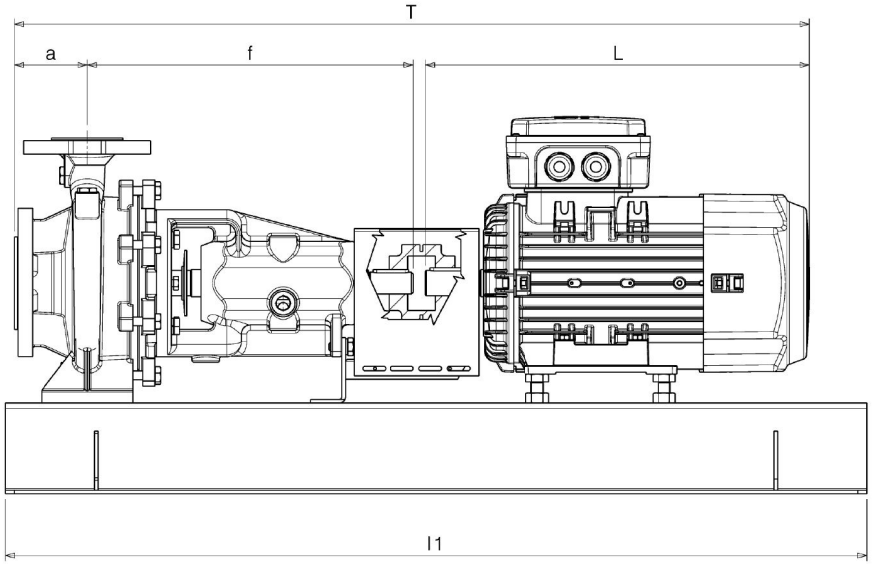

Connections	
Suction side	Discharge port
DN125	DN100
PN10/16	PN10/16

Dimensions in mm	
"b3	620"
"H	320"
"L	735"
"l1	1370"
"T	1345"
a	125
f	471
h1	120
h2	280

MAIN_PROJECT_TITLE	BUSINESS_PROCESS_ID	OWNER_	ISSUE_DATE	LAST_MODI_DATE
			2024-09-02	**2024-09-02**