General tolerances			
	ISO 2768-1m		
	Basic Size Range over	up to	Perm devia.
Machining	0.5	3	±0.1
	3	6	±0.1
	6	30	±0.2
	30	120	±0.3
	120	400	±0.5
	400	1000	±0.8
	1000	2000	±1.2
	2000	4000	±2
	4000	8000	±3

General tolerances			
	EN ISO 13920 B		
	Basic Size Range over	up to	Perm devia.
Welding		30	±1
	30	400	±2
	400	1000	±3
	1000	2000	±4
	2000	4000	±6
	4000	8000	±8
	8000	12000	±10
	12000	16000	±12
	16000	20000	±14
	20000		±16

6.3 (✓)

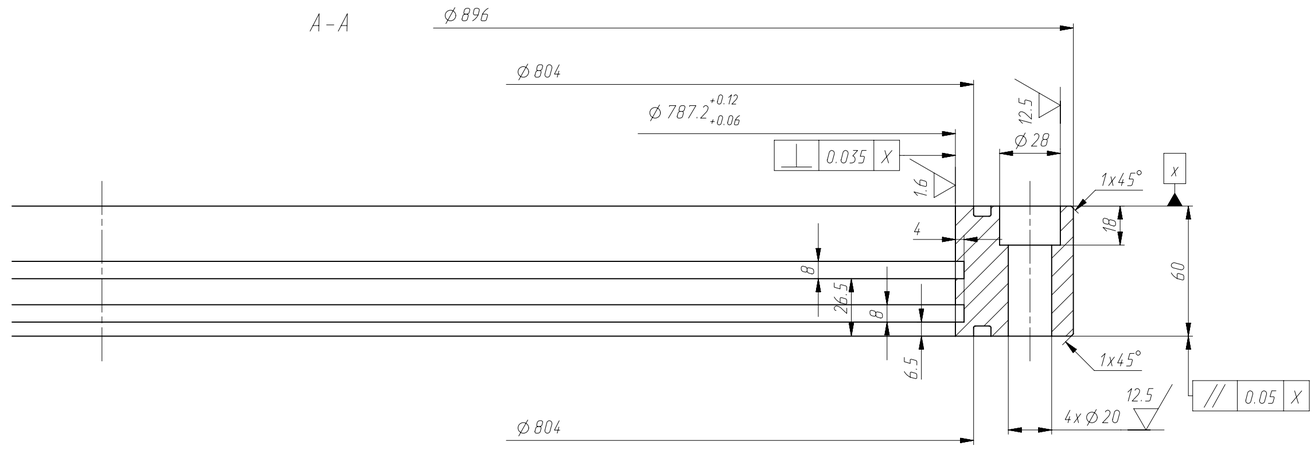

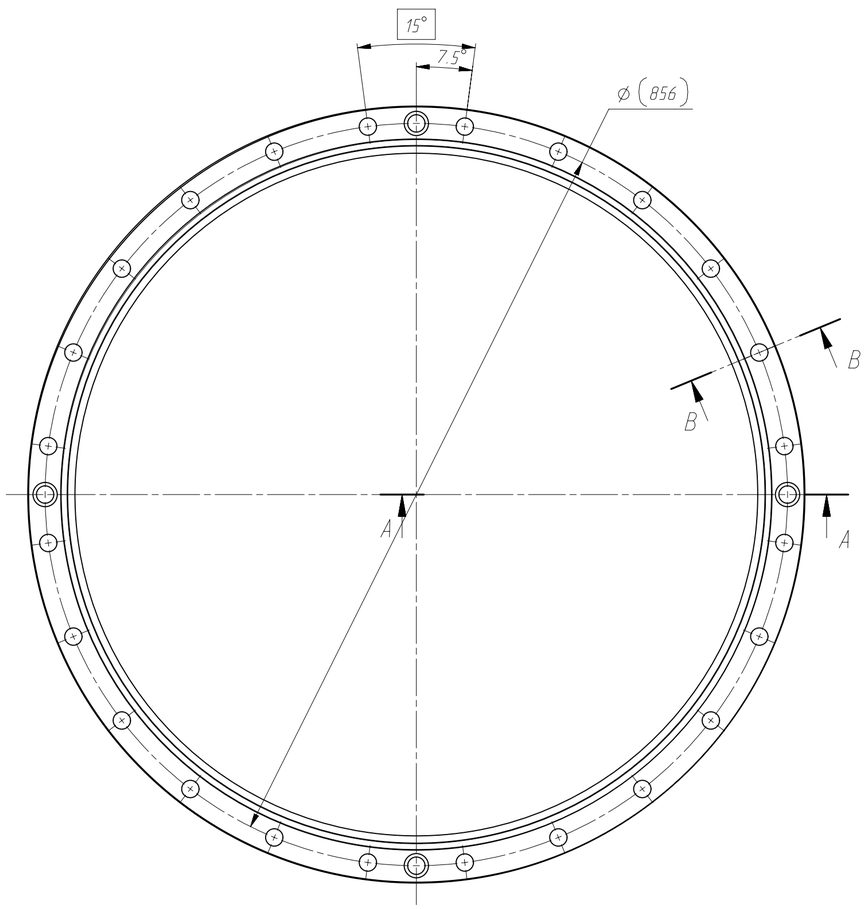

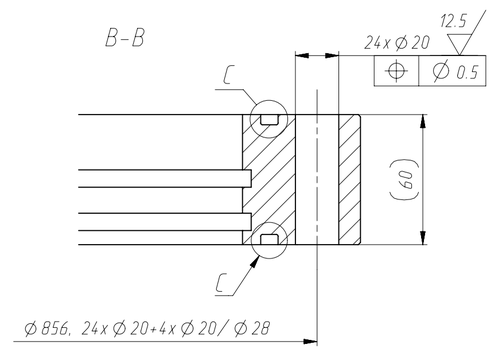

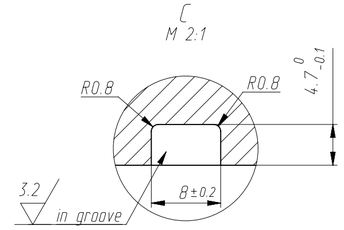

		1995100	Alternative version Сменяем версия				
HPP "Debeda"						Proj. method	Drawing No 1995114	Revision 0
						Turbine "Francis" Lower Labyrinth Seal Ring Прьстен лабиринтен долен	Mass 60.5	Scale 1:2
	Site	Correct.	Qty	Document No	Sign	Date		
		Drawn		Arabadzhiev				
		Checked		Arabadzhiev			Page 1	T.pages 1
T496	Index	T.Control					G-CuAl10Ni DIN 1714	VAPHYDRO BY VAPTECH
		Approved		Todorov				

Size A2