General tolerances			
	ISO 2768-1m		
	Basic Size Range		Perm devia.
	over	up to	
Machining	0.5	3	±0.1
	3	6	±0.1
	6	30	±0.2
	30	120	±0.3
	120	400	±0.5
	400	1000	±0.8
	1000	2000	±1.2
	2000	4000	±2
	4000	8000	±3

3.2

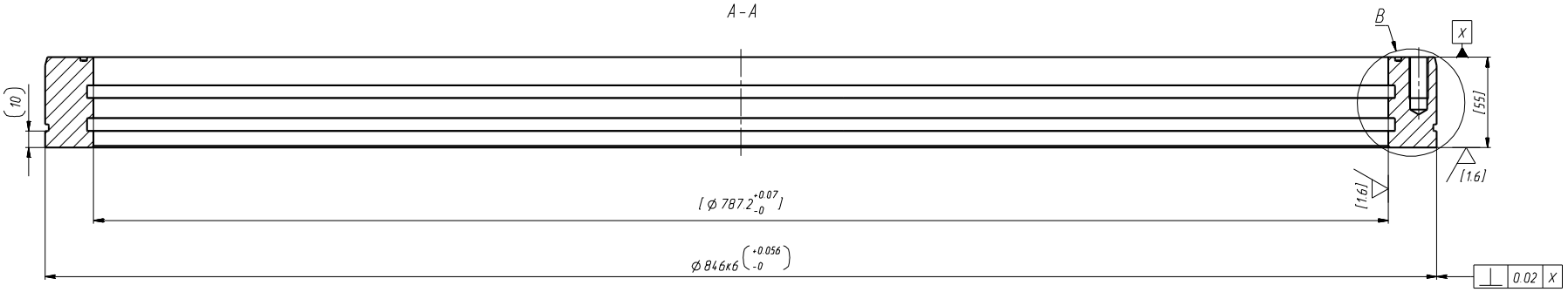

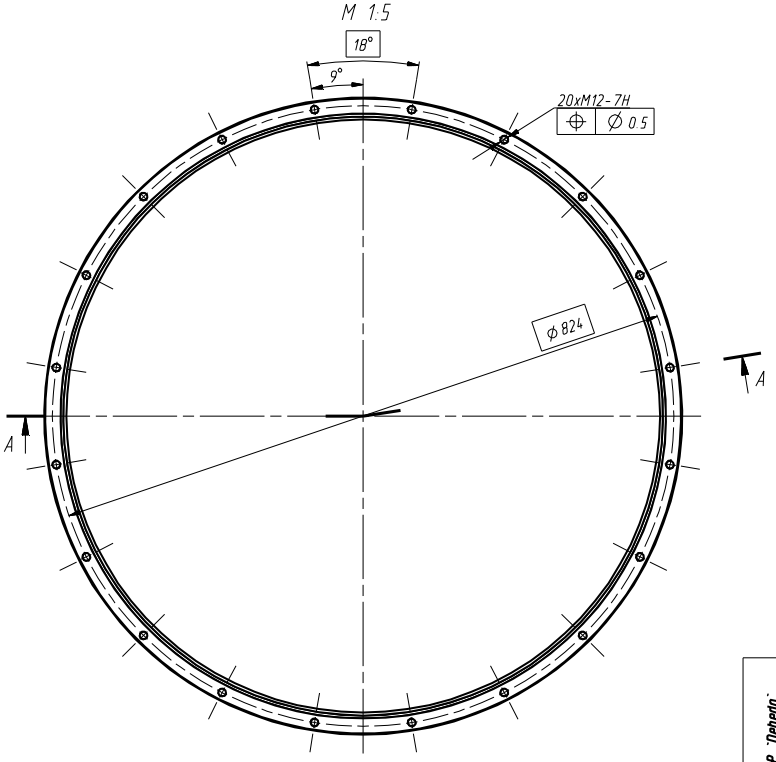

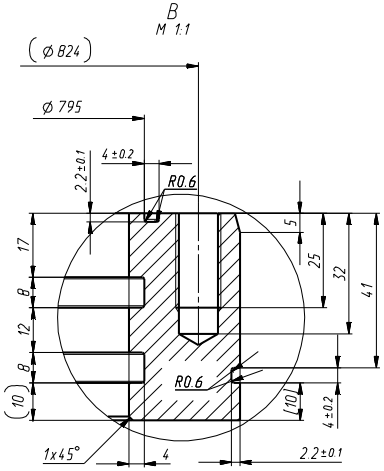

Всички размери в средни скоби [] да се изпълнят съвместно с детайл "Капак горен" №1996101

All dimensions in square brackets [] to be achieved simultaneously in "Upper cover" 1996101

HPP "Debeda"		1996100	Upper cover			Proj. method	Drawing No 1996102	Revision 0
		Correct	Qty	Document No	Sign	Date	Turbine Francis Upper seal ring Пръстен лабиринтен горен	Mass 30.4 / Scale 1:2
	Title	Drawn		Nikolov		24.02.15		
		Checked		Bozhinov				Page 1 / T.pages 1
1496		T.Control					G-CuAl10Ni DIN1714	VAPHYDRO BY VAPTECH
	Index	Approved						

Size A2